Nilo A2

Plan View

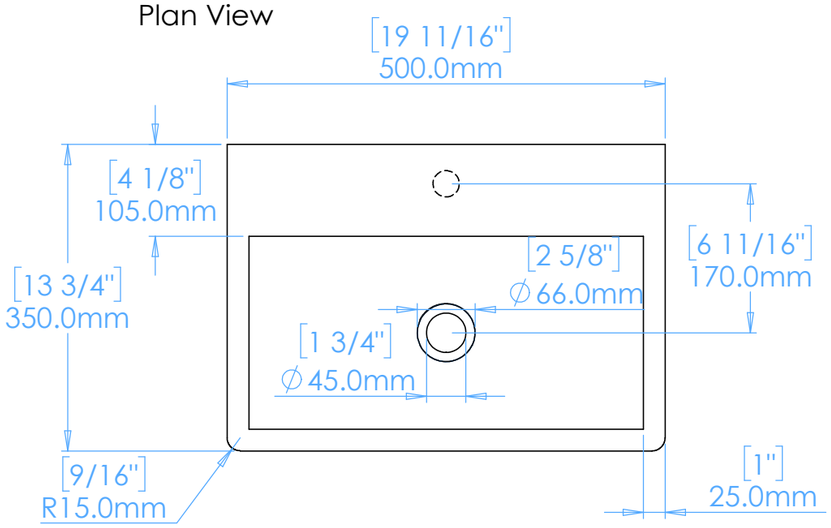

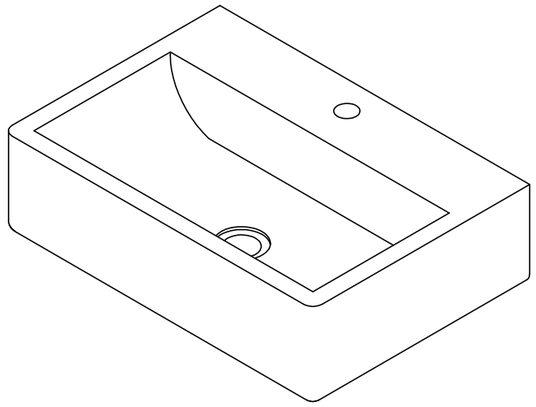

Front View

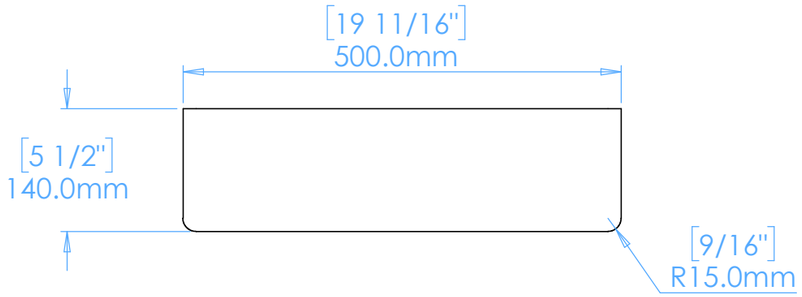

Side View

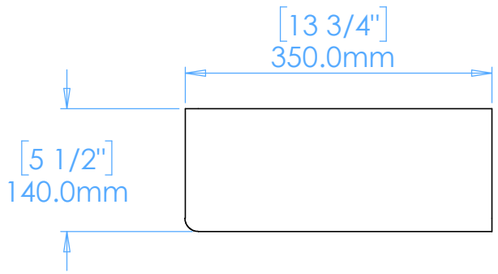

Underside View

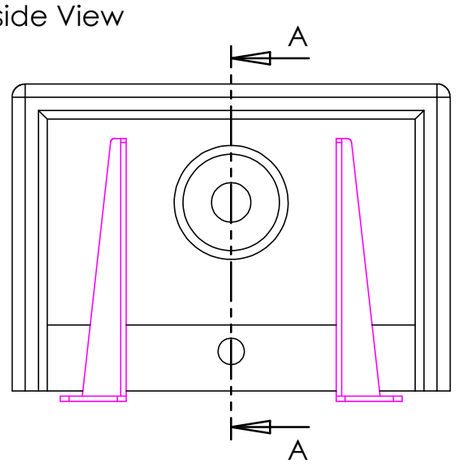

Section A-A

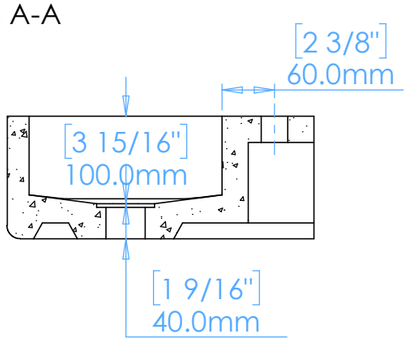

NOTES

Unless otherwise specified, dimensions are in millimeters.

Kast take no responsibility for any dimensions obtained by scaling from this drawing.

DIMENSIONS:	
L500mm (19 11/16inches) W350mm (13 3/4inches) H140mm (5 1/2inches)	
CODE:	N.A2
WEIGHT:	28kg / 62lbs
BRACKETS:	Included
DRAWN BY:	DB
TOLERANCE:	+/- 3mm